BEYE-2460-24*60W Wash Zoom Big B-eye Moving Head

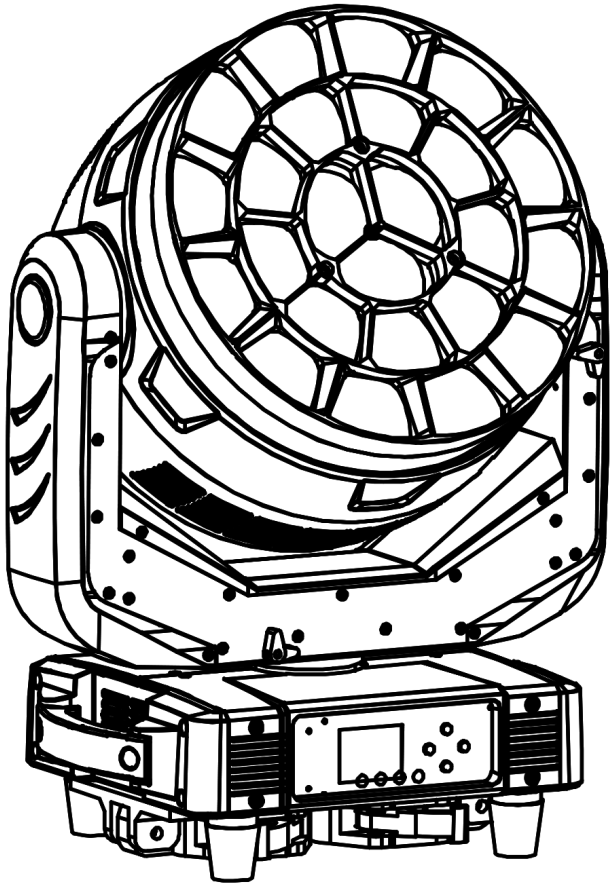

User Manual

Please read manual carefully before use

CONTENTS

1.Safety Instructions 3
2. Technical Specification 6
3. DMX Set Up 7
4. Display 8
5. Menu 9
6. LUX Data 12
7. DMX Channel List 12
8. Mounting 31
9. Product Size 32
10. Attention 33
11. Trouble Shooting 33
A. The unit does not work, no light and the fan does not work 33
B. No response to DMX controller 33
C. One of the channels is not working well 34
12. Fixture Cleaning 34

Thank you for choosing our LED lights. Each facility has been rigorously tested. Please check whether the facility has been damaged during transportation. If you find any parts are missing or broken, please contact the manufacturer immediately. Please do not return the product without any notice!

1.Safety Instructions

Please read this manual carefully, which includes important information on installation,use and maintenance.

Attention

- Please keep this USER MANUAL for future consultation. If you sell the facility to another user, be sure that they also receive this USER MANUAL.
- Please open and check in details and make sure there is no transportation damage.
- Before operating, ensure that the voltage and frequency of power supply match the power requirements of the facility.
- It's important to ground the yellow/green conductor to earth in order to avoid electric shock.
- The facility must be installed in a location with adequate ventilation, at least 50 cm from adjacent surfaces. Be sure that no ventilation slots are blocked.
- Make sure the power is disconnected before removing the facility.
- Make sure there are no flammable materials close to the unit while operating as it is fire hazard.
- Use safety cable when fixes this facility. Do not handle the facility by taking its head only, but always by taking its base.
- Maximum ambient temperature is 40℃. Do not operate it where the temperature is higher than this.
- Please stop using the facility for serious operating problems. Stop using the facility immediately. Never try to repair the facility by yourself, but be a

professional technician. Please contact the supplier's service department for technical support.

- Do not touch any wire during operation as high voltage might be causing electric shock.
- When the housing or lens is damaged, it must be replaced.
- Direct sunlight or any other strong light source penetrating the lens of the light will cause serious internal damage to the facility. During unpacking, installation, use and long-term outdoor idleness, it is forbidden to expose the lens of the facility to direct sunlight or any other strong light source at any angle. It is forbidden to aim the beam of one light directly at another light.

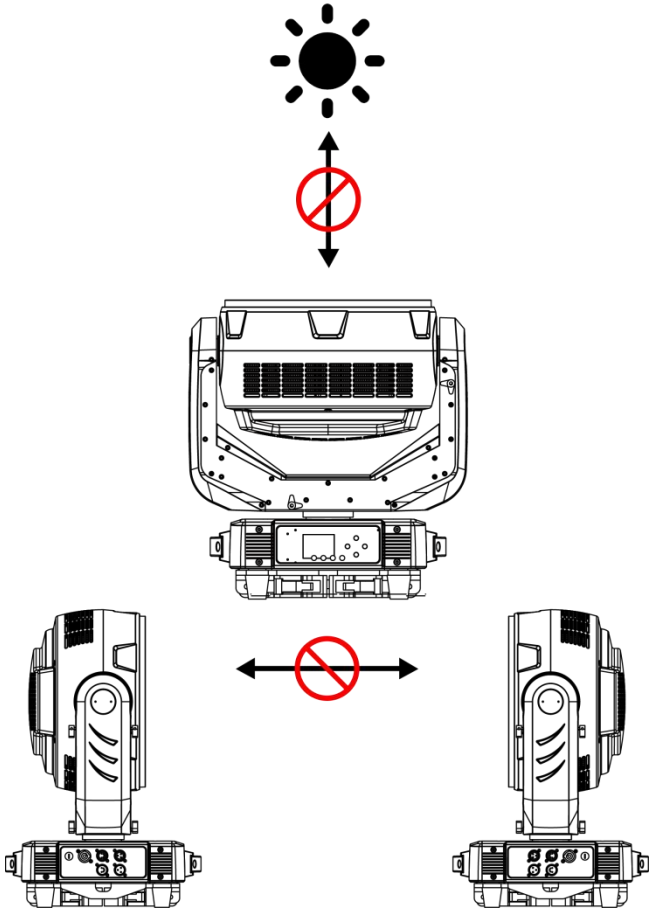

Caution

There are no accessories available, do not open the housing and try to repair the facilities yourself. Please contact our company for after service.

Installation

The unit should be mounted via its screw holes on the bracket. Always ensure that the unit is firmly fixed to avoid vibration and slipping while operating. And make sure that the structure to which you are attaching the unit is secure and is able to support a weight of 10 times of the unit's weight. Also always use a

safety cable that can hold 12 times of the weight of the unit when installing the fixture.

The facility must be installed by professionals, and keep it far away from fire, walking road, and easy touched place.

2. Technical Specification

Light Source	24*60W 4in1 RGBW LED
LED Lifetime	≥ 50000H
Power Voltage	AC100-240V, 50-60Hz
Power Consumption	1500W
Beam Angle	3.5°-45°
Control Modes	DMX512/ Auto/ Sound/ Master/ Manual/ RDM/ Artnet(optional)
DMX Channel	21/ 25/ 33/ 129/ 106 Channel
Protection Rating	IP20
Display	TFT2.4 display; Chinese and English languages can be switched at will, and the font can be reversed 180°
Data In/Out Socket	3-pin /5-pin XLR sockets
Power Socket	Power-Con in/ out
Housing Material	ABS High temperature resistant plastics
Pan	540°accuracy 2.11°/step, fine-tuning accuracy: 0.008°
Tilt	270°accuracy 0.86°/step, fine-tuning accuracy: 0.0034°
Pan/Tilt Resolution	Automatically correct pan/tilt position
MAX. Connection	2units（230V，50Hz） 2.5mm² power cable
	1 units（110V，60Hz） 2.5mm² power cable
Dimension	354*444*477mm
Net Weight	25 kg
Carton Package	610*485*580mm 1in1 GW: 31 kg
Flight Case	915*530*755mm 2in1 GW: 90.32 kg
Features	Full light range dimming, 65536-level dimming

	accuracy; fast strobe 1~25Hz; single-point control of lamp beads; three-in-one effects of dyeing, beam, and bee eye; preset multiple color macro functions; preset multiple effect macro functions
Configuration	Signal cable 1pc
	Power cable 1pc
	Manual 1pc

3. DMX Set Up

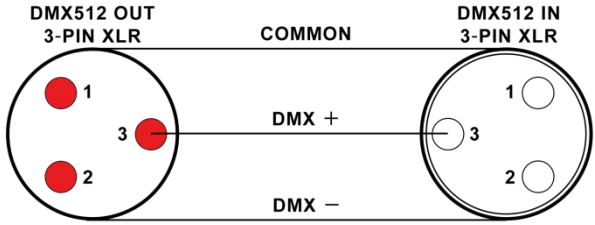

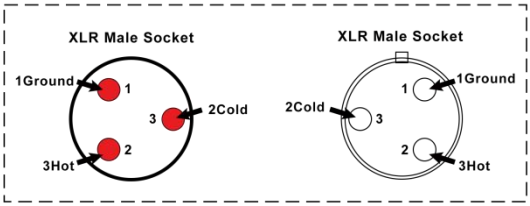

XLR Pin Configuration
pin 1=Ground
pin 2=Data Compliment (negative)
pin 3=Data true (positive)

Pin1: Ground **pin2: Negative** **pin3: Positive**

DMX Connection

To ensure optimal transmission of DMX data, please connect facilities in the shortest way. The connection order won't affect the DMX address code. For example, if the address code is set to 1, no matter where the facility is connected, its address code will not change. This is determined by the principle of the DMX controller.

Operation method

You can operate in the following three modes:

- Auto mode - the light can automatically complete all color changes
- DMX control mode - each light can be individually controlled by a standard DMX512 console
- Master mode - any light can work as a host in any of the above modes, and the other lights will work synchronously as slaves

4. Display

There are four buttons on the LED panel: MENU, UP, DOWN, and ENTER.

MENU UP DOWN ENTER

Please press the "MENU" to exit or return to the previous menu, press "UP" or "DOWN" to select the upper and lower menus or adjust the values, and press "ENTER" to confirm.

FRONT VIEW

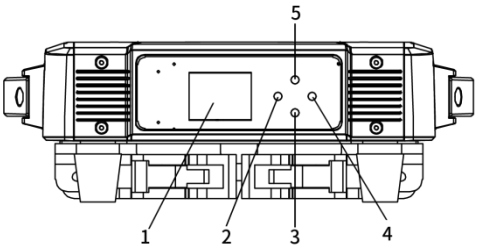

REAR VIEW

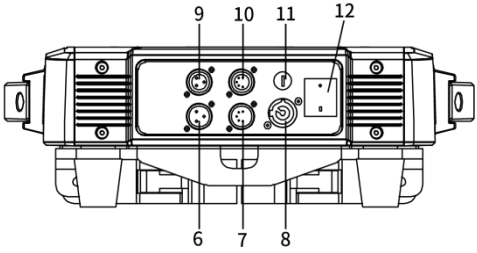

After powering on, the facility will automatically return to the last operation

when it was powered off, then get into standby status. For more details, please refer to the information below↓

5. Menu

Menu	1.Pan Degree	1.540 2.360	Pan running angle selection
	2.Mic Sense	001-100	Voice control sensitivity adjustment
	3.Pan Invert	1.NO 2.YES	Pan forward and reverse setting
	4.Tilt Invert	1.NO 2.YES	Tilt forward and reverse setting
	5.No Signal	1.Black Out 2.Hold	
	6.Fan Set	1.Auto 2.Low 3.High	
	7.ArtNet Set	1.ArtNet Enable： 1.ON 2.OFF	
		2.Universe:0-255	
		3.IP Mode： A.2.X.X.X Auto B.10.X.X.X Auto C.Custom	
		4.Custom IP:192.168.000.001	
		5.SubNetMask： 255.000.000.000	
	8.Default	1.Yes	Restore factory settings
		2.No	

	9.Adjust	Pass Word: ****	Changing the values of Pan/Tilt/Focus/Rotation can correct the angle; changing the values of R/G/B/W can adjust the white balance
		1.Pan: 0-255	
		2.Tilt: 0-255	
		3.Focus: 0-255	
		4.Rotation: 0-255	
		5.Red: 0-255	
		6.Green: 0-255	
		7.Blue: 0-255	
		8. White: 0-255	
Address	001-512		Setting address 001-512
Mode	1.DMX 512		Setting control mode
	2.Auto		
	3.Sound		
	4.Manual	1.Pan: 0-255	Manual control
		2.Tilt: 0-255	
		3.Focus: 0-255	
		4.Rotation: 0-255	
		5.Red: 0-255	
		6.Green: 0-255	

		7.Blue: 0-255	
		8.White: 0-255	
		9.Strobe: 0-255	
	5.Master/Alone	1.Master	Master or alone
		2.Alone	
Channel	1.21 Channels	21 CH	Select control mode
	2.25 Channels	25 CH	
	3.33 Channels	33 CH	
	4.129 Channels	129 CH	
	5.106Channels	106CH	
Display	Display	1.YES 2.NO	Display font forward and reverse settings
Language	1.English		Select language
	2.Chinese		
Reset	1.NO		Reset
	2.YES		
Information	1.CH Value		Display all Mode information
	2.Tem**℃		Show LED board temperature
	3.Soft V1.0		Program version number
	4.IP	002.050.164.014	Default IP

	5.Mask	255.000.000.000	Default sub mask

6. LUX Data

Beam Angle =3.5°

R lux	14000	9900	3580
G lux	30800	19200	11900
B lux	7410	4320	2070
W lux	46400	31400	16900
4in1 lux	98000	59400	32500

Beam Angle =45°

R lux	1410	549	154
G lux	3100	1140	494
B lux	813	294	94
W lux	4560	1680	640
4in1 lux	9030	3350	1290

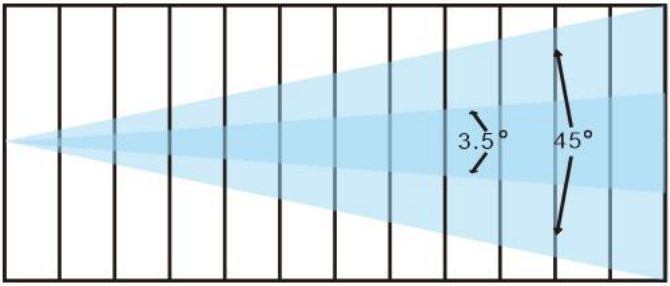

Distance (m)	3	5	8
Spot diameter (m) 3.5°	0.62	0.8	1.2
Spot diameter (m) 45°	2.80	4.30	

7. DMX Channel List

▶ **21CH Mode**

CH	Function	DMX Value	Description
1	Red	0-255	Red dimming

CH	Function	DMX Value	Description
2	Red adjustment	0-255	Red adjustment
3	Green	0-255	Green dimming
4	Green adjustment	0-255	Green adjustment
5	Blue	0-255	Blue dimming
6	Blue adjustment	0-255	Blue dimming
7	White	0-255	White dimming
8	White adjustment	0-255	White adjustment
9	Color temperature	0-15	No function
		16-35	R 100%,G UP,B 0%
		36-55	R DOWN,G 100%,B 0%
		56-75	R 0%,G 100%,B UP
		76-95	R 0%,G DOWN,B 100%
		96-115	R UP,G 0%,B 100%
		116-135	R 100%,G 0%,B DOWN
		136-155	R 100%,G UP,B UP
		156-175	R DOWN,G DOWN, B 100%
		176-195	R 100% G 100% B 100% W 100%
		196-200	2800K
		201-205	3200K
		206-210	4000K
		211-215	4500K

CH	Function	DMX Value	Description
		216-220	5000K
		221-225	5600K
		226-230	6500K
		231-235	7000K
		236-240	7500K
		241-255	8000K
10	Macro color	0-9	No function
		10-19	Macro color 1
		20-29	Macro color 2
		.....	.....
		240-249	Macro color 24
		250-255	Macro color 25
11	Dimmer	0-255	Dark to bright linear dimming
12	Dimmer adjust	0-255	Dimmer adjustment control
13	Strobe	0-3	Strobe Dimming
		4-203	Synchronous strobe speed slow to fast (1Hz-25Hz)
		204-255	Random strobe
14	Pan	0 - 255	Pan control
15	Pan adjustment	0-255	Pan adjustment control
16	Tilt	0-255	Tilt control

CH	Function	DMX Value	Description
17	Tilt adjustment	0-255	Tilt adjustment control
18	Zoom	0-255	From narrow to wide
19	Lens rotation	0-155	0~60°
		156-205	Clockwise infinite rotation
		206-255	Counterclockwise rotation
20	Dimming Mode	0 - 49	Mode -1
		50 - 99	Mode -2
		100-149	Mode -3
		150-255	Mode -4
21	Reset	0-250	No function
		251-255	Reset within 5s

▶25CH Mode

CH	Function	DMX Value	Description
1	Pan	0-255	Pan control
2	Pan adjustment	0-255	Pan adjust control
3	Tilt	0-255	Tilt control

CH	Function	DMX Value	Description
4	Tilt adjustment	0-255	Tilt adjust control
5	Pan/Tilt speed	0-255	Speed from fast to slow
6	Zoom	0-255	From narrow to wide
7	Lens rotation	0-155	0~60°
		156-205	Clockwise infinite rotation from fast to slow
		206-255	Counterclockwise rotation from slow to fast
8	Dimmer	0 - 255	Dark to bright linear dimming
9	Strobe	0-3	Strobe Dimming
		4-203	synchronous strobe speed
			From slow to fast (1Hz-25Hz)
		204-255	Random strobe
10	R dimming	0-255	Dark to bright linear dimming
11	G dimming	0-255	Dark to bright linear dimming
12	B dimming	0-255	Dark to bright linear dimming
13	W dimming	0-255	Dark to bright linear dimming
14	Color temperature	0 -15	NO function
		16-35	R 100%,G UP,B 0%
		36-55	R DOWN,G 100%,B 0%
		56-75	R 0%,G 100%,B UP
		76-95	R 0%,G DOWN,B 100%
		96-115	R UP,G 0%,B 100%

CH	Function	DMX Value	Description
		116-135	R 100%,G 0%,B DOWN
		136-155	R 100%,G UP,B UP
		156-175	R DOWN,G DOWN, B 100%
		176-195	R 100%,G 100%,B1 00%,W100%
		196-200	2800K
		201-205	3200K
		206-210	4000K
		211-215	4500K
		216-220	5000K
		221-225	5500K
		226-230	5600K
		231-235	6500K
		236-240	7000K
		241-245	8000K
15	Macro color	0-9	NO function
		0-10	Macro color 1
		20-29	Macro color 2
		....	....(10 numbers 1 macro color)
		240-249	Macro color 24
		250-255	Macro color 25
16	Static pattern	0-9	NO function

CH	Function	DMX Value	Description
		0-10	Monochrome pattern 1
		13-15	Monochrome pattern 2
		.....	.....(3 numbers 1 pattern)
		208-210	Monochrome pattern 67
		211-213	Mixed color pattern 1
		214-216	Mixed color pattern 2
		....	....(3 numbers 1 pattern)
		250-252	Mixed color pattern 14
		253-255	Mixed color pattern 15
17	Dynamic pattern	0-9	NO function
		0-10	Monochrome dynamic pattern 1
		15-19	Monochrome dynamic pattern 2
		.....	.....(5 numbers 1 pattern)
		155-159	Monochrome pattern 30
		160-164	Mixed color dynamic pattern 1
		165-169	Mixed color dynamic pattern 2
		.....	.....(5 numbers 1 pattern)
		220-224	Mixed color dynamic pattern 13
		225-255	Mixed color dynamic pattern 14
	Dynamic pattern speed	0-127	Forward, from fast to slow （with 17CH）

CH	Function	DMX Value	Description
18		128-255	Reverse, from slow to fast(with 17CH)
19	Dynamic pattern speed (with 17 channels)	0-9	No function
		10-132	Forward, from fast to slow
		133-255	Go backward, from slow to fast
20	Back color R	0-255	Dark to bright linear dimming
21	Back color G	0-255	Dark to bright linear dimming
22	Back color B	0-255	Dark to bright linear dimming
23	Back color W	0-255	Dark to bright linear dimming
24	Dimming Mode	0 - 49	Mode -1
		50 - 99	Mode -2
		100-149	Mode -3
		150-255	Mode -4
25	Reset	0-250	NO function
		251-255	Reset within 5s

▶33CH Mode

CH	Function	DMX Value	Description
1	Pan	0-255	Pan control
2	Pan adjustment	0-255	Pan adjust control
3	Tilt	0-255	Tilt control
4	Tilt adjustment	0-255	Tilt adjust control
5	Pan/Tilt speed	0-255	Speed from fast to slow
6	Zoom	0-255	From narrow to wide
7	Lens rotation	0-155	0~60°
		156-205	Clockwise infinite rotation from fast to slow
		206-255	Counterclockwise rotation from slow to fast
8	Dimmer	0 - 255	Dark to bright linear dimming
9	Dimming fine-tuning	0-255	Dimming fine-tuning control
10	Strobe	0-3	Strobe dimming
		4-203	Synchronous strobe speed From slow to fast (1Hz-25Hz)
		204-255	Random strobe
11	Red dimming	0-255	Red dimming
12	Red dimming	0-255	Red dimming
13	Green dimming	0-255	Green dimming
14	Green dimming	0-255	Green dimming
15	Blue dimming	0-255	Blue dimming

16	Blue dimming	0-255	Blue dimming
17	White dimming	0-255	White dimming
18	White dimming	0-255	White dimming
19	Dimming Mode	0 - 49	Mode -1
		50 - 99	Mode -2
		100-149	Mode -3
		150-255	Mode -4
20	Color temperature	0 -15	No function
		16-35	R100%,G UP,B 0%
		36-55	R DOWN,G 100%,B 0%
		56-75	R 0%,G 100%,B UP
		76-95	R 0%,G DOWN,B 100%
		96-115	R UP,G 0%,B 100%
		116-135	R 100%,G 0%,B DOWN
		136-155	R 100%,G UP,B UP
		156-175	R DOWN,G DOWN, B 100%
		176-195	R 100%,G 100%,B 100%,W 100%
		196-200	2800K
		201-205	3200K
		206-210	4000K
		211-215	4500K
		216-220	5000K

		221-225	5500K
		226-230	5600K
		231-235	6500K
		236-240	7000K
		241-245	8000K
21	Macro color	0-9	NO function
		0-10	Macro color 1
		20-29	Macro color 2
		....	....(10 numbers 1 macro color)
		240-249	Macro color 24
		250-255	Macro color 25
22	Static pattern	0-6	NO function
		6-13	Monochrome pattern 1
		14-20	Monochrome pattern 2
		.....	.....(7 numbers 1 pattern)
		182-188	Monochrome pattern 26
		189-195	Mixed color pattern 1
		196-202	Mixed color pattern 2
		....	....(7 numbers 1 pattern)
		245-251	Mixed color pattern 8
		252-255	Mixed color pattern 9
23	Dynamic pattern	0-9	NO function

		0-10	Monochrome dynamic pattern 1
		13-15	Monochrome dynamic pattern 2
		.....	.....(3 numbers 1 pattern)
		178-180	Monochrome pattern 57
		181-183	Mixed color dynamic pattern 1
		184-186	Mixed color dynamic pattern 2
		.....	.....(3 numbers 1 pattern)
		232-234	Mixed color dynamic pattern 18
		235-255	Mixed color dynamic pattern 19
24	Pattern translation (with 23 channels)	0-255	Select dynamic pattern scene
25	Dynamic pattern speed (with 17 channels)	0-9	No function
		10-132	Forward, from fast to slow
		133-255	Go backward, from slow to fast
26	Pattern effect fade	0-255	Pattern effect fade
27	Background total dimming	0-255	Background total dimming from 0 - 100%
28	Background strobe	0-255	Background strobe
29	Back color Red	0-255	Dark to bright linear dimming
30	Back color Green	0-255	Dark to bright linear dimming
31	Back color Blue	0-255	Dark to bright linear dimming
32	Back color White	0-255	Dark to bright linear dimming

33	Reset	0-250	No function
		251-255	Reset within 5s

▶129CH Mode

CH	Function	DMX Value	Description
1	Pan	0-255	Pan control
2	Pan adjustment	0-255	Pan adjust control
3	Tilt	0-255	Tilt control
4	Tilt adjustment	0-255	Tilt adjust control
5	Pan/Tilt speed	0-255	Speed from fast to slow
6	Zoom	0-255	From narrow to wide
		0-155	0~60°
		156-205	Clockwise infinite rotation from fast to slow
7	Lens rotation	206-255	Counterclockwise rotation from slow to fast
8	Dimmer	0 - 255	Dark to bright linear dimming
9	Dimming fine-tuning	0-255	Dimming fine-tuning control
10	Strobe	0-3	Strobe dimming
		4-203	Synchronous strobe speed
			From slow to fast (1Hz-25Hz)
		204-255	Random strobe
11	Red dimming	0-255	Red dimming
12	Red dimming	0-255	Red dimming

13	Green dimming	0-255	Green dimming
14	Green dimming	0-255	Green dimming
15	Blue dimming	0-255	Blue dimming
16	Blue dimming	0-255	Blue dimming
17	White dimming	0-255	White dimming
18	White dimming	0-255	White dimming
19	Dimming Mode	0 - 49	Mode -1
		50 - 99	Mode -2
		100-149	Mode -3
		150-255	Mode -4
20	Color temperature	0 -15	No function
		16-35	R100%,G UP,B0%
		36-55	R DOWN,G100%,B0%
		56-75	R0%,G100%,B UP
		76-95	R0%,G DOWN,B100%
		96-115	R UP,G0%,B100%
		116-135	R100%,G0%,B DOWN
		136-155	R100%,G UP,B UP
		156-175	R DOWN,G DOWN, B 100%
		176-195	R100%,G100%,B100%,W 100%
		196-200	2800K
		201-205	3200K

		206-210	4000K
		211-215	4500K
		216-220	5000K
		221-225	5500K
		226-230	5600K
		231-235	6500K
		236-240	7000K
		241-245	8000K
21	Macro color	0-9	No function
		10-19	Macro color 1
		20-29	Macro color 2
		....	....(10 numbers 1 macro color)
		240-249	Macro color 24
		250-255	Macro color 25
22	Static pattern	0-6	No function
		7-13	Monochrome pattern 1
		14-20	Monochrome pattern 2
		.....	.....(7 numbers 1 pattern)
		182-188	Monochrome pattern 26
		189-195	Mixed color pattern 1
		196-202	Mixed color pattern 2
		....	....(7 numbers 1 pattern)

		245-251	Mixed color pattern 8
		252-255	Mixed color pattern 9
23	Dynamic pattern	0-9	No function
		10-12	Monochrome dynamic pattern 1
		13-15	Monochrome dynamic pattern 2
		.....	.....(3 numbers 1 pattern)
		178-180	Monochrome pattern 57
		181-183	Mixed color dynamic pattern 1
		184-186	Mixed color dynamic pattern 2
		.....	.....(3numbers 1 pattern)
		232-234	Mixed color dynamic pattern 18
		235-255	Mixed color dynamic pattern 19
24	Pattern translation (with 23 channels)	0-255	Select dynamic pattern scene
25	Dynamic pattern speed (with 17 channels)	0-9	No function
		10-132	Forward, from fast to slow
		133-255	Go backward, from slow to fast
26	Pattern effect fade	0-255	Pattern effect fade
27	Background total dimming	0-255	Background total dimming from 0 - 100%
28	Background strobe	0-255	Background strobe
29	Back color Red	0-255	Dark to bright linear dimming

30	Back color Green	0-255	Dark to bright linear dimming
31	Back color Blue	0-255	Dark to bright linear dimming
32	Back color White	0-255	Dark to bright linear dimming
33	Reset	0-255	No function
		251-255	Reset within 5 s
34	R 1 LED dimming	0-255	Red 1 LED dimming
35	G 1 LED dimming	0-255	Green 1 LED dimming
36	B 1 LED dimming	0-255	Blue 1 LED dimming
37	W 1 LED dimming	0-255	White 1 LED dimming
38	.....	.....	.....
126	R 24 LED dimming	0-255	Red 24 LED dimming
127	G 24 LED dimming	0-255	Green 24 LED dimming
128	B 24 LED dimming	0-255	Blue 24 LED dimming
129	W 24 LED dimming	0-255	White 24 LED dimming

▶106CH Mode

Used with ArtNet, 1 CH to 10CH are controlled by DMX512, 11 CH to 106 CH are controlled by ArtNet

CH	Function	DMX Value	Description
1	Pan	0-255	Pan control
2	Pan adjustment	0-255	Pan adjust control

CH	Function	DMX Value	Description
3	Tilt	0-255	Tilt control
4	Tilt adjustment	0-255	Tilt adjust control
5	Pan/Tilt speed	0-255	Speed from fast to slow
6	Zoom	0-255	From narrow to wide
7	Lens rotation	0-155	0~60°
		156-205	Clockwise infinite rotation from fast to slow
		206-255	Counterclockwise rotation from slow to fast
8	Reset	0-250	No function
		251-255	Reset within 5s
9	Dimmer	0 - 255	Dark to bright linear dimming
10	Strobe	0-3	Strobe dimming
		4-203	Synchronous strobe speed From slow to fast (1Hz-25Hz)
		204-255	Random strobe
11	R1 LED dimming	0-255	R1 LED dimming
12	G1 LED dimming	0-255	G1 LED dimming
13	B1 LED dimming	0-255	B1 LED dimming
14	W1 LED dimming	0-255	W1 LED dimming
……	……	……	……
103	R24 LED dimming	0-255	R24 LED dimming
104	G24 LED dimming	0-255	G24 LED dimming

CH	Function	DMX Value	Description
105	B24 LED dimming	0-255	B24 LED dimming
106	W24 LED dimming	0-255	W24 LED dimming

8. Mounting

When installing the unit, the trussing or area of installation must be able to hold 10 times the weight without any deformation. When installing the unit must be secured with a secondary safety attachment, e.g. an appropriate safety cable. Never stand directly under the facility while mounting, uninstalling or repairing facilities.

High-altitude mounting requires for extensive experience, including working load limits calculating , installation material, and periodic safety check of installation materials and facilities. If you’re lack of mentioned qualifications, do not attempt the installation yourself. These installation should be checked by a skilled person annually.

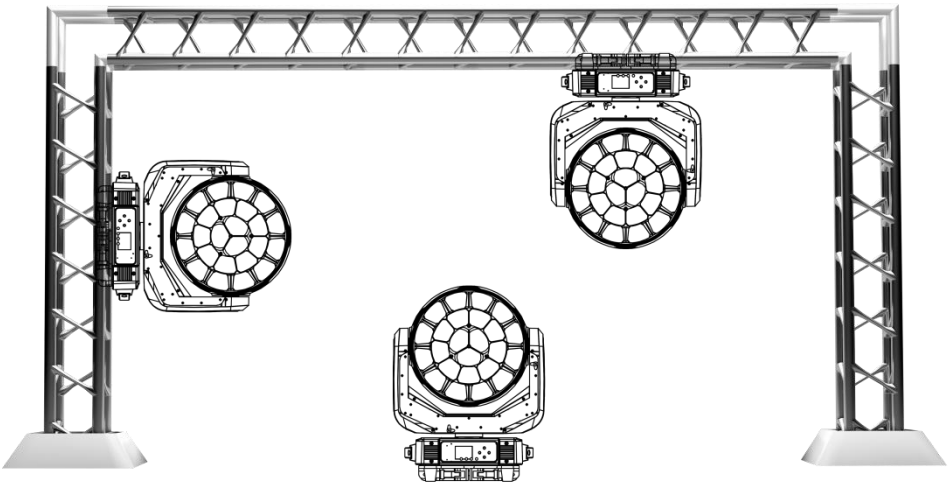

BEYE-2460 works properly in above different mounting, hanging upside-down from a ceiling, sideways on trussing, or set on smooth horizontal surface. Be sure this facility is at least 12m (40ft) away from flammable materials

(decoration etc.). Always use and install the safety cable to prevent accidental damage or injury from the facility failure. Never use handles for secondary attachment.

NOTICE: The suitable environment temperature of the facility is from -25˚ C to 45˚ C. Do not place this facility in an environment where the temperatures are under or above the temperatures stated. This will help the fixture run at its best and extend the lifetime.

9. Product Size

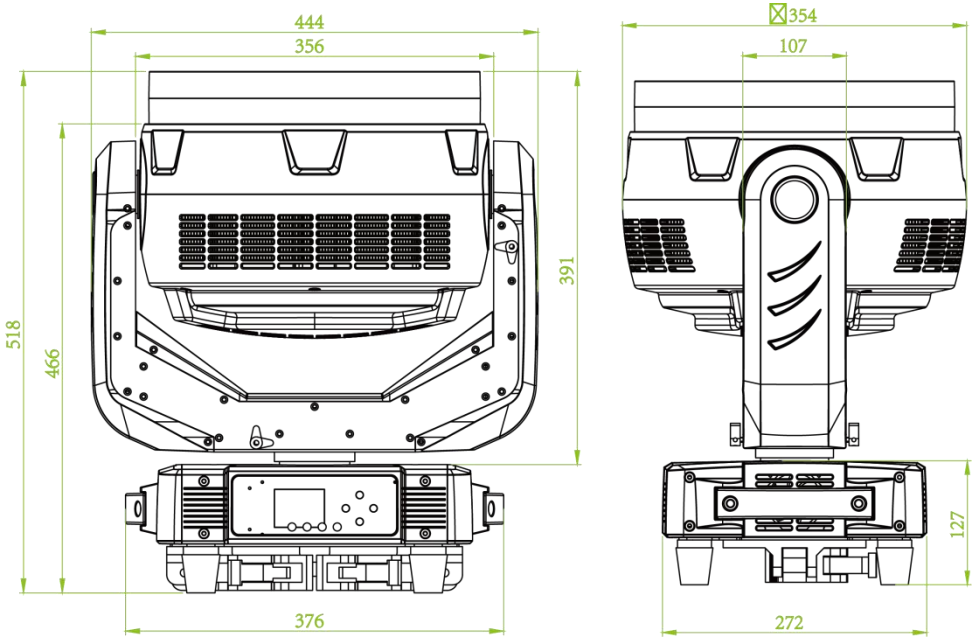

10. Attention

1. When the facility is powered on, please avoid looking directly at the facility.

2. When assembling/ replacing LED, be sure to cut off the main power of facilities before opening the cover upon the LED board.

11. Trouble Shooting

Following are a few common problems that may occur during operation. Here are some suggestions for easy troubleshooting:

A. The unit does not work, no light and the fan does not work

1. Check the status of power connection and fuse.
2. Check the voltage.
3. Check the power indicator.

B. No response to DMX controller

1. If the display screen flashes, check the DMX signal connector and signal line whether the connection is correct.
2.If the display screen does not flash, but no response to channel control, check whether the address code or channel setting is correct.
3.If the DMX signal transmission is intermittent, check if the XLR and DMX cables are in good condition.
4.Try using another controller.
5.Check if the DMX cables is too close to the high-voltage wire, which may damage or interfere with the signal circuit.
6. The facility has not completed the self-check.

C. One of the channels is not working well

1. The stepper motor might be damaged or the cable connected to the PCB is broken.
2. The motor's drive IC on the PCB might be out of condition.

12. Fixture Cleaning

The lens and diffuser should be clean frequently to get better light effect. Wipe frequency according to the environment. Humidity, excessive smoke, and dirty environment will make lens dusty.

- Use soft cloth and special glass cleaner.
- Wipe lens surface at least every 30 days.
- Use vacuum cleaners or air guns to clean the interior structure of the facility, at least twice a year.

⚠Warning:

To avoid the danger of lighting strikes and fire, please do not place the facility in a humid environment. Do not disassemble it without permission, otherwise, the manufacturer will not provide warranty. If the facility fails, please contact the manufacturer first.

Product Warranty Card

Product: 24*60W Wash Zoom Big B-eye Moving Head

Model NO.: BEYE-2460 Manufacture Date:

User: Purchase Date:

Manufacturer: Sales Store:

Address: ATTN.:

ATTN.: Phone:

Phone:

Note: The above blank must be filled in and sealed by the end user or sales point, otherwise no warranty will be provided. (Below please check the warranty period and terms)

Warranty Period: This facility is warranted for 2 years from the date of purchase.

Warranty Terms:

1. Except for man-made damage and natural disasters

2. If the facility fails to function properly during the warranty period, please contact our after service department or our local distributor directly.

1) Fail to present a valid warranty card.

2) Omissions, alterations, and trade sales names on the warranty card.

3) Failures and damage caused by force majeure.

4) Failures and damage caused during transportation and handling.

5) Failures and damage caused by failure to follow the instructions for use.

6) Failures and damage caused by disassembly, repair, and modification of the product without the manufacturer's authorization or by non-professionals.

7) Failures caused by the use of accessories not approved by the factory or not matched by the factory.

▲ **Thank you for reading this manual. Please keep it for future reference.**